ATELIER 001

COSMIC COLLECTION

REGOLITH PENDANT

DIMENSIONS
Dia. 70cm (27.5”)
Height 42cm (16.5”)

WEIGHT
15kg (33.1lbs)

MATERIALS
Satin brass framework
Hand-spun brass plate

FINISH
Dark bronze patina;
Please note that each piece is finished by hand and will vary slightly in patterns and textures.

LEAD TIME
14-16 weeks excl. shipping

ILLUMINATION
Integrated LED (No bulb required)
LED colour temperature 2700K
LED dimmable driver
Output 700mA 17W 1500lm
Input 120/240V
50,000 hours rated life

DIMMING
Mains, DALI, 0-10V or 1-10V

CEILING MOUNTED
Driver to be integrated into ceiling.
Suspension cable 3m (118”) to be cut to size.

REGION
CE certified;
UL listing available at a surcharge.

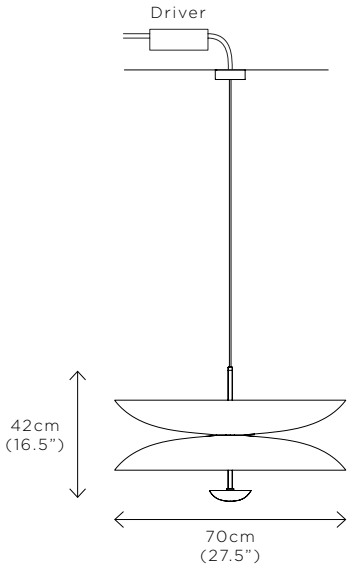

E info@atelier001.com | T +44 (0)20 3778 0858

ATELIER 001

COSMIC COLLECTION

REGOLITH PENDANT

DIMENSIONS
Dia. 100cm (39.4”)
Height 52cm (20.5”)

WEIGHT
27kg (59.5lbs)

MATERIALS
Satin brass framework
Hand-spun brass plate

FINISH
Dark bronze patina;
Please note that each piece is finished by hand and will vary slightly in patterns and textures.

LEAD TIME
14-16 weeks excl. shipping

ILLUMINATION
Integrated LED (No bulb required)
LED colour temperature 2700K
LED dimmable driver
Output 700mA 17W 1500lm
Input 120/240V
50,000 hours rated life

DIMMING
Mains, DALI, 0-10V or 1-10V

CEILING MOUNTED
Driver to be integrated into ceiling.
Suspension cable 3m (118”) to be cut to size.

REGION
CE certified;
UL listing available at a surcharge.

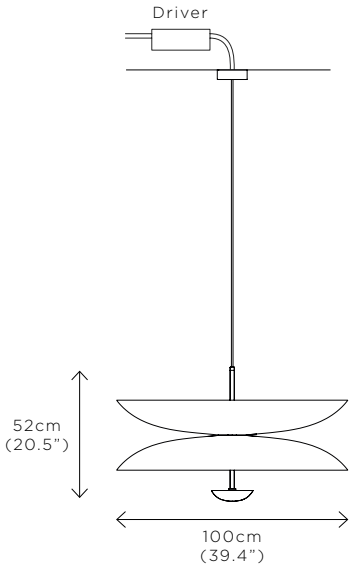

E info@atelier001.com | T +44 (0)20 3778 0858